shat·r·shield

Project

Date | Type

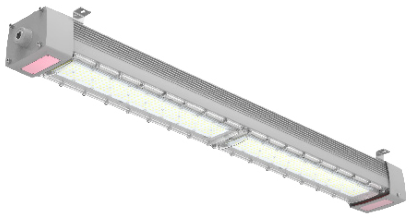

HAZLO LINEAR

HAZARDOUS LOCATION LED LUMINAIRE

The HZL Series LED fixture is designed for marine and hazardous locations requiring linear illumination. It is suitable for areas classified as hazardous by the presence of flammable gases, vapors, or combustible dust in accordance with UL requirements.

Typical Applications - Paper Mills, Chemical Processing, Power Plants, Petrochemical, Offshore Oil, Wastewater, Foundries, Marine and Mining.

UL 844 | UL 1598A | 3G VIBRATION | NEMA 4X | IP66 | IK10 | 5 WARRANTY | 180 lm/W

Ordering Chart Information

Example: HZL-2-SW1-SL-VL-D-12-CP-WC-EM

HZL-SL-D-12

Fixture	Length	Wattage	CCT	Input Voltage	Dimmable	Beam Angle	Lens		Mount	Battery Back-up	
HZL			SL		D	12					
HZL	2 2FT	SW1 Selectable 30W,40W, 60W	SL Selectable 4K 5K 6.5K	VL 120V–277V	D Dimmable	12 120°	CP	Clear Flat PC	WC Wall/Ceiling	BLANK	No Battery Backup
	4 4FT	SW2 Selectable 80W,100W, 120W		VH[1] 277–480V			FP[1]	Frosted Flat PC	PM Pole Mount	EM[1]	With Battery Backup
									GM[1] Guide Rail Mount		

Note:
1. Please call to confirm the delivery time for these options. (800) 223-0853

Specifications

Certifications: UL844 Class 1 Division 2, Group A, B, C, D
UL1598A - Marine Certified, Class 2 Division 2 Group F, G
UL1598 - Wet Locations

Ambient Temperature Rating: -40°C (-40°F) to +65°C (149°F)

Lumens: Polycarbonate Lens: **SW1:** 5400–10800 lm **SW2:** 14400–21600 lm

Watts: **SW1:** 60W - High, 40W - Med, 30W - Low
SW2: 120W - High, 100W - Med, 80W - Low

Voltage: 120–277 VAC/277–480 VAC

Input Frequency: 50/60Hz

LED Life: L70 >100,000 hrs

Lumens per Watt: 180lm/W

Lens: Clear Flat Polycarbonate or Frosted Flat Polycarbonate

Dimming: 1–10V (DC)

Dimensions: **HZL-2:** 28.35” × 5.7” × 4.65” **HZL-4:** 49.61” × 5.7” × 4.65”

Color Temperatures: 4000K, 5000K, 6500K

Warranty: 5-year (emergency backup battery for 2 years)
Complete warranty terms located here.

Features

- Fixed mounting design for quick installation
- Top cable entry for easy wiring
- Side wiring access covers with captive screws
- Aluminum alloy housing for superior corrosion resistance and heat dissipation performance
- Optical system with PC diffuser for visual comfort and uniform illumination; multiple beam options available
- High-efficiency optics reduce luminaire glare with a frosted lens

Dimensional Data

HZL-2

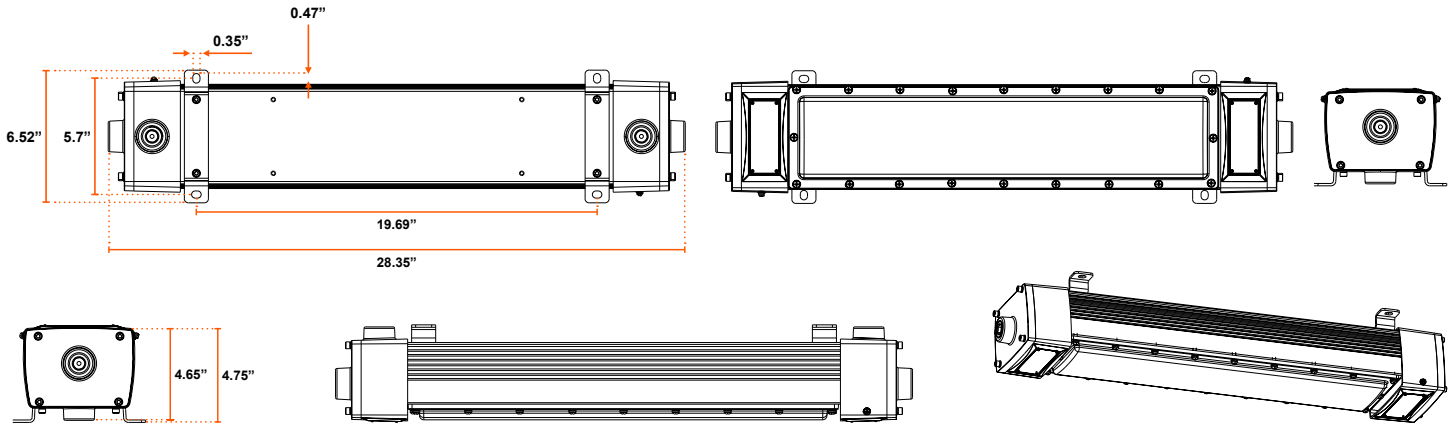

HZL-4

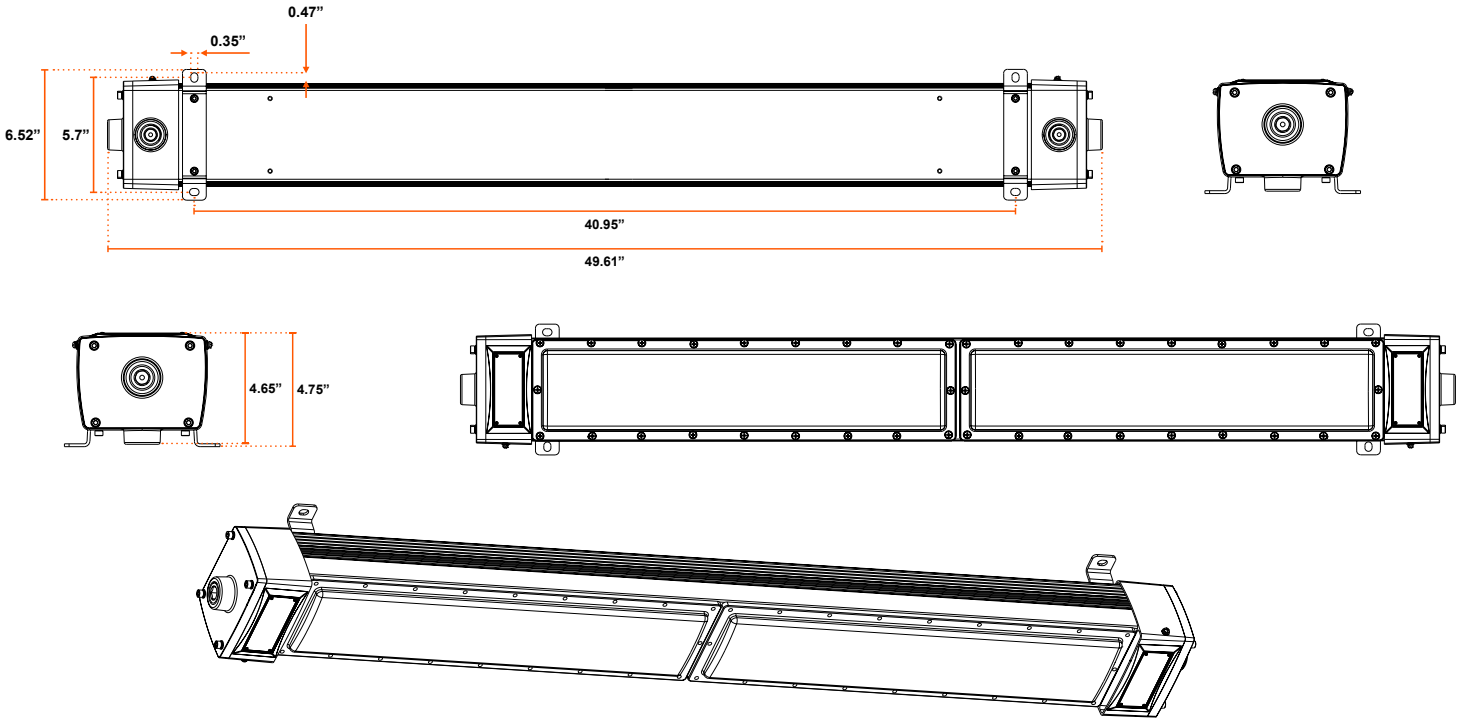

Mounting Methods

Option 1: Ceiling Mounting

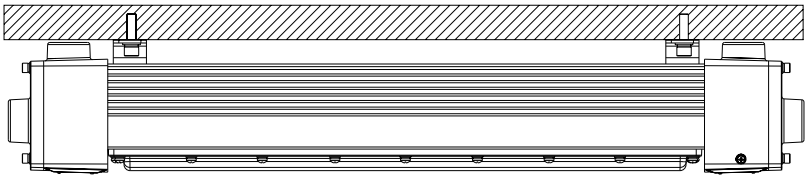

Option 2: Pole Mounting

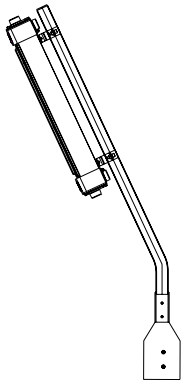

Option 3: Guide Rail Mounting

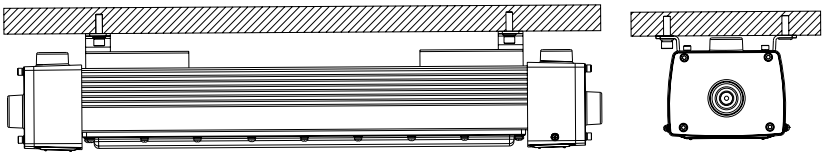

Photometric Data

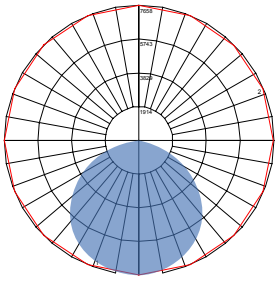

Indoor Report

- Maximum Candela = 7657.9
- Horizontal Angle = 270
- Vertical Angle = 2
- #1 Vertical Plane Through Horizontal Angles (270–90) (Through Max. Cd.)
- #2 Horizontal Cone Through Vertical Angle (2) (Through Max. Cd.)

Photometric Data

Photometric Data - Wattage - SW1 - 30W, 40W, 60W

Watt	Lens Material	CCT	Lumens	Description	IES File
30W	PC	4000K	5572	30W HZL - 4000K CCT	HZLSW130W4KVLD12CP
30W	PC	5000K	5477	30W HZL - 5000K CCT	HZLSW130W5KVLD12CP
30W	PC	6500K	5507	30W HZL - 6500K CCT	HZLSW130W65KVLD12CP
40W	PC	4000K	7410	40W HZL - 4000K CCT	HZLSW140W4KVLD12CP
40W	PC	5000K	7359	40W HZL - 5000K CCT	HZLSW140W5KVLD12CP
40W	PC	6500K	7371	40W HZL - 6500K CCT	HZLSW140W65KVLD12CP
60W	PC	4000K	10973	60W HZL - 4000K CCT	HZLSW160W4KVLD12CP
60W	PC	5000K	11004	60W HZL - 5000K CCT	HZLSW160W5KVLD12CP
60W	PC	6500K	11006	60W HZL - 6500K CCT	HZLSW160W65KVLD12CP

Photometric Data - Wattage - SW2 - 80W, 100W, 120W

Watt	Lens Material	CCT	Lumens	Description	IES File
80W	PC	4000K	15062	80W HZL - 4000K CCT	HZLSW280W4KVLD12CP
80W	PC	5000K	14901	80W HZL - 5000K CCT	HZLSW280W5KVLD12CP
80W	PC	6500K	15043	80W HZL - 6500K CCT	HZLSW280W65KVLD12CP
100W	PC	4000K	18714	100W HZL - 4000K CCT	HZLSW2100W4KVLD12CP
100W	PC	5000K	18600	100W HZL - 5000K CCT	HZLSW2100W5KVLD12CP
100W	PC	6500K	18726	100W HZL - 6500K CCT	HZLSW2100W65KVLD12CP
120W	PC	4000K	22880	120W HZL - 4000K CCT	HZLSW2120W4KVLD12CP
120W	PC	5000K	22246	120W HZL - 5000K CCT	HZLSW2120W5KVLD12CP
120W	PC	6500K	22188	120W HZL - 6500K CCT	HZLSW2120W65KVLD12CP

Shipping Dimensions

Product	Model	Length	Width	Height	Net Weight	Gross Weight	Quantity/Carton
HZL	SW1	33.27”	8.90”	8.46”	12.79lbs	14.15lbs	1pc
HZL	SW2	54.53”	8.90”	8.46”	19.29lbs	20.93lbs	1pc